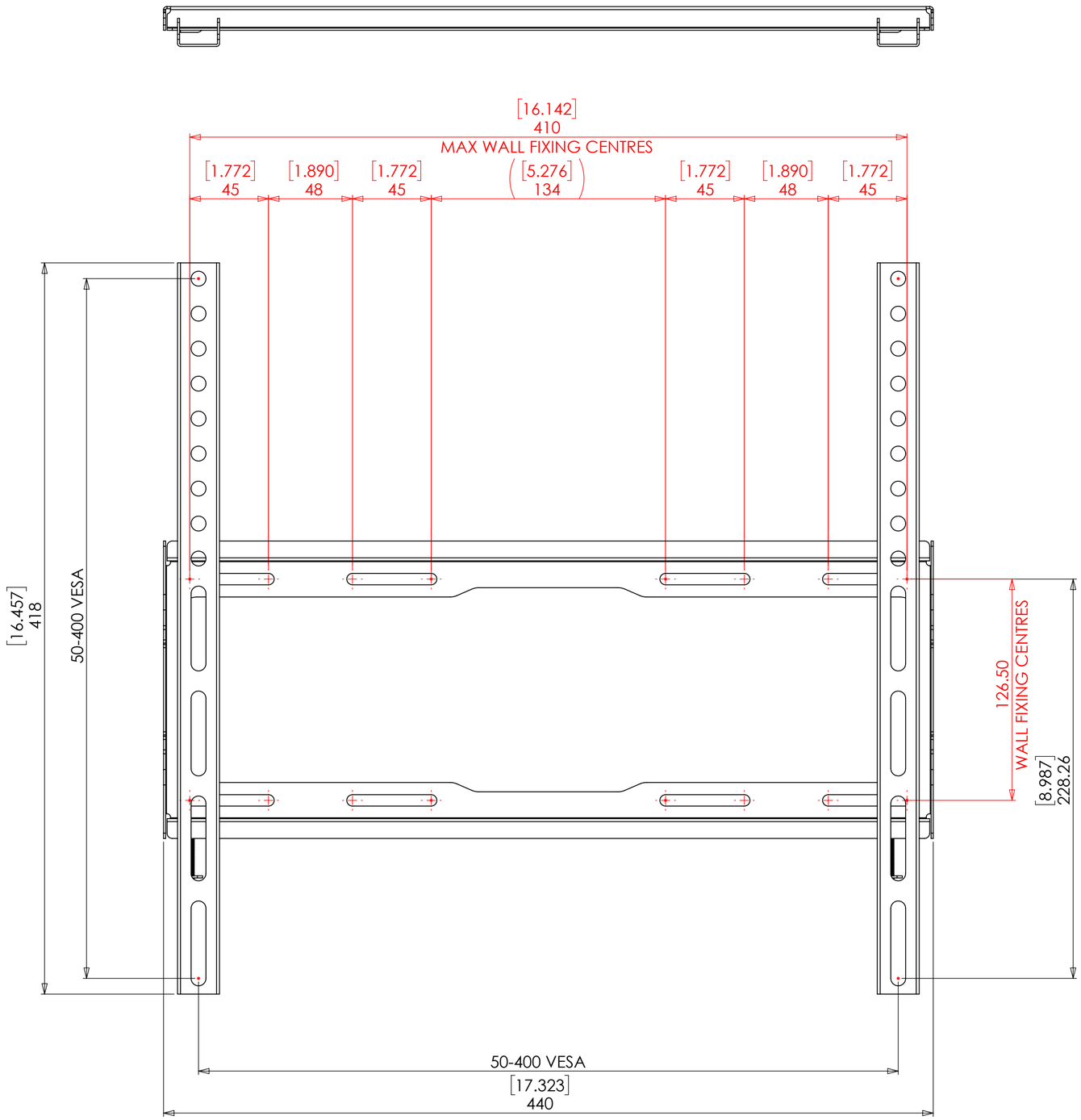

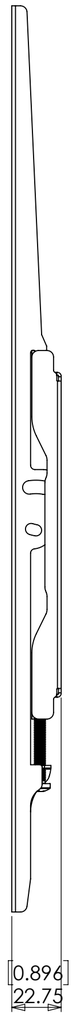

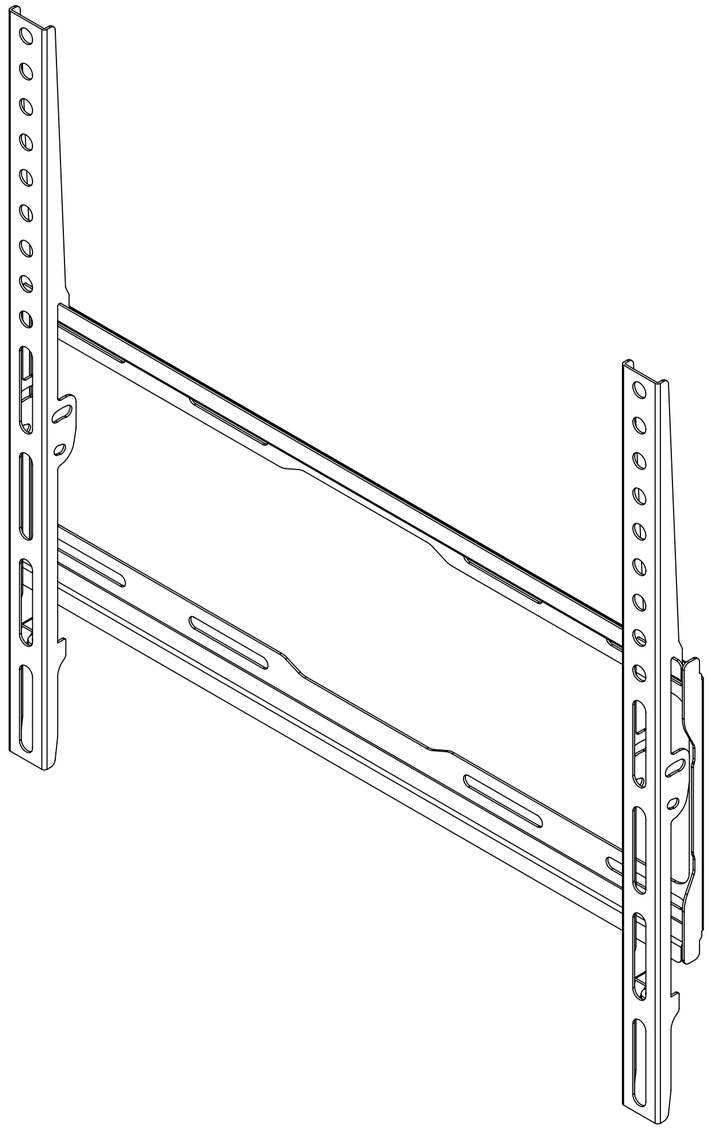

PRODUCT WEIGHT :- 664.16 grams
(AS SHOWN WITHOUT PACKAGING AND FIXINGS)